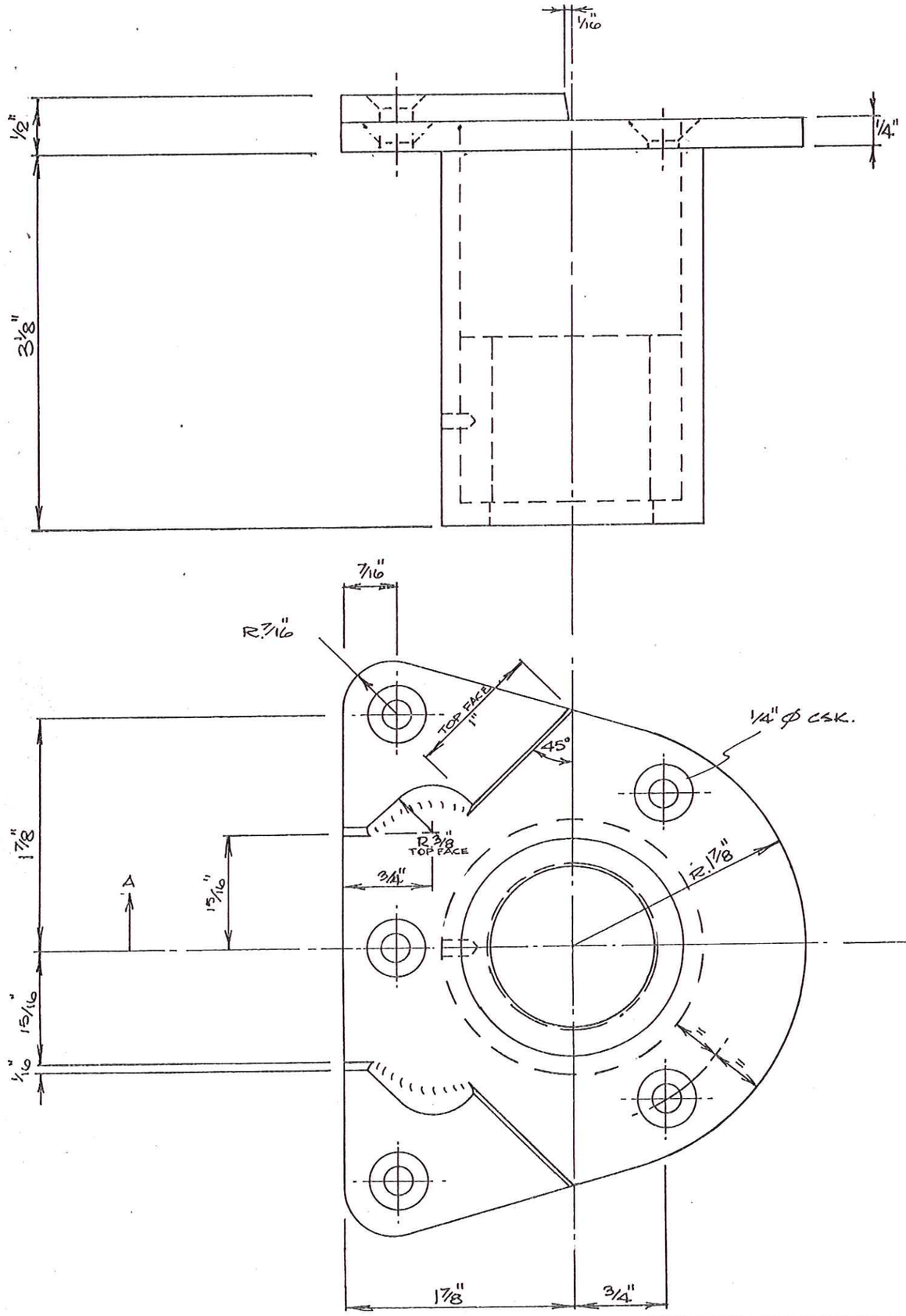

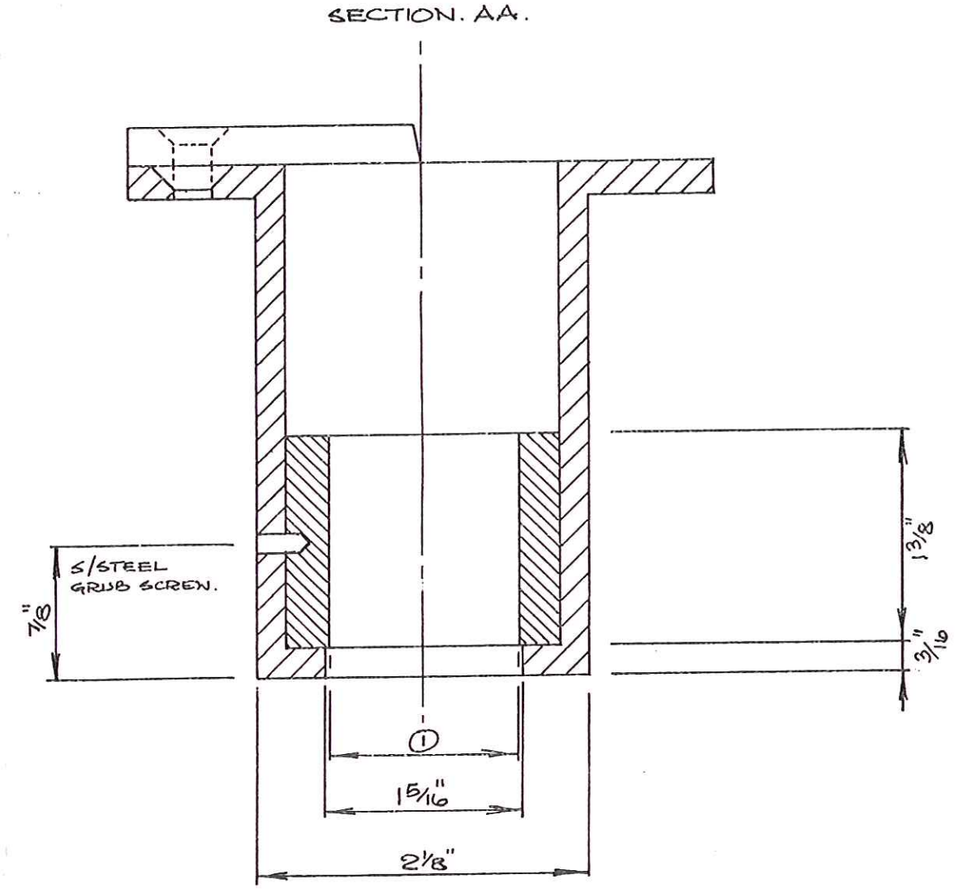

(1) INSIDE DIAMETER OF POLYESTER BEARING TO SUIT RUDDER STOCK DR Nº M28.022

UNCONTROLLED

ISSUED BY MARINE PROJECTS DRAWING OFFICE 17 FEB 1997

MATERIAL: HTB1

MARINE PROJECTS (PLYMOUTH) LTD

MOODY 28 ALSO MOODY 31

TILLER HEAD BEARING

DR. ECT. 12. NOV. 86

SCALE: FULL SIZE M28.027